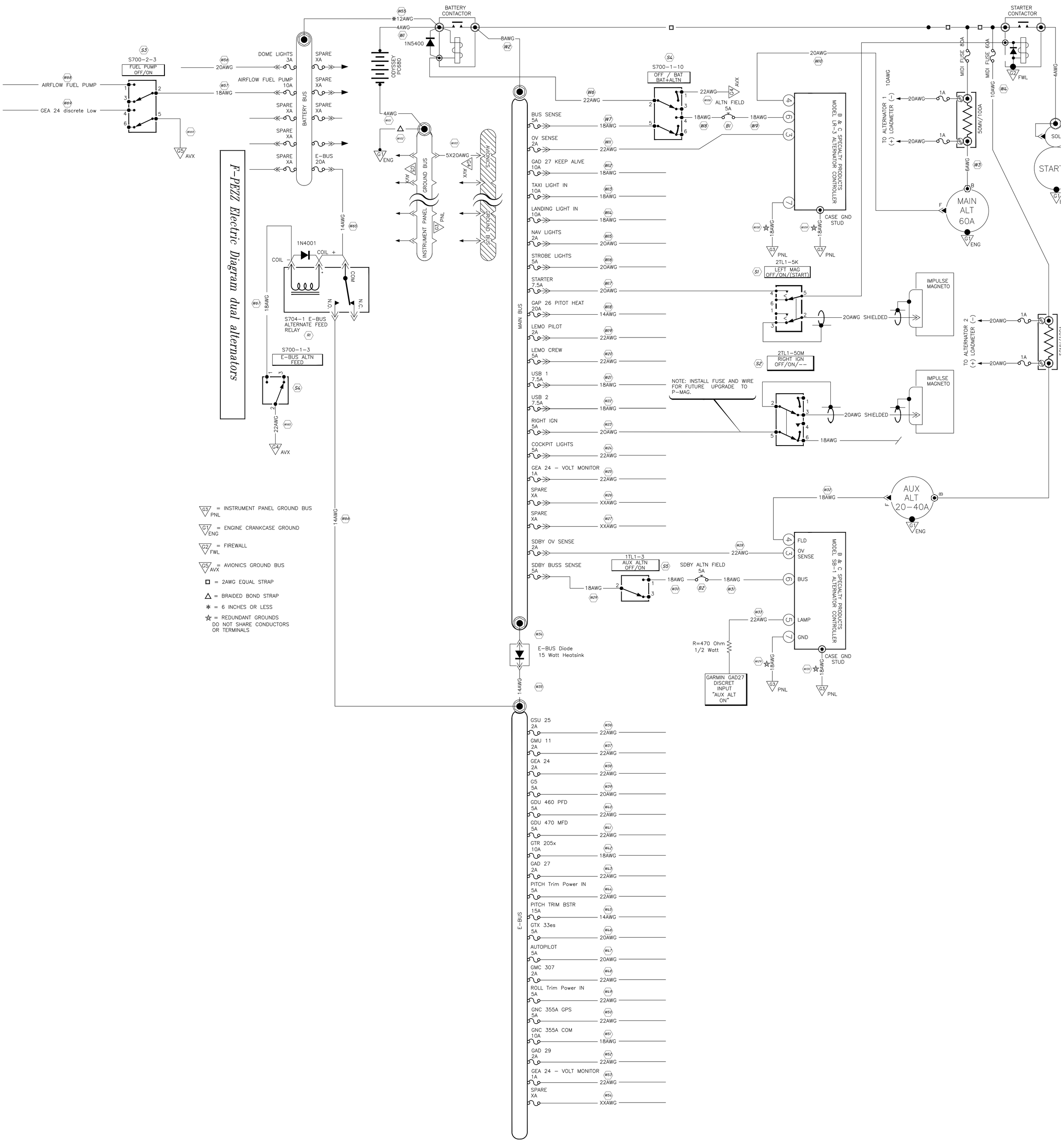
F-PBZZ Electric Diagram dual alternators
S700-2-3
FUEL PUMP OFF/ON
AIRFLOW FUEL PUMP
GEA 24 discrete Low
20AWG
18AWG
DOME LIGHTS 3A
AIRFLOW FUEL PUMP 10A
SPARE XA
E-BUS 20A
BATTERY BUS
12AWG
4AWG
1N5400
BATTERY CONTACTOR
8AWG
ODYSSEY PC680
5X20AWG
GROUND BUS
INSTRUMENT PANEL
AVIONICS
ENG
PNL
AVX
1N4001
COIL
COIL +
COM
N.O.
N.C.
S704-1 E-BUS ALTERNATE FEED RELAY
S700-1-3
E-BUS ALTN FEED
14AWG
22AWG
G3 PNL = INSTRUMENT PANEL GROUND BUS
G1 ENG = ENGINE CRANKCASE GROUND
G2 FWL = FIREWALL
G5 AVX = AVIONICS GROUND BUS
= 2AWG EQUAL STRAP
= BRAIDED BOND STRAP
* = 6 INCHES OR LESS
= REDUNDANT GROUNDS DO NOT SHARE CONDUCTORS OR TERMINALS
MAIN BUS
BUS SENSE 5A
OV SENSE 2A
GAD 27 KEEP ALIVE 10A
TAXI LIGHT IN 10A
LANDING LIGHT IN 10A
NAV LIGHTS 2A
STROBE LIGHTS 5A
STARTER 7.5A
GAP 26 PITOT HEAT 20A
LEMO PILOT 2A
LEMO CREW 5A
USB 1 7.5A
USB 2 7.5A
RIGHT IGN 5A
COCKPIT LIGHTS 5A
GEA 24 – VOLT MONITOR 1A
SPARE XA
SDBY OV SENSE 2A
SDBY BUSS SENSE 5A
S700-1-10
OFF / BAT BAT+ALTN
ALTN FIELD 5A
22AWG
B & C SPECIALTY PRODUCTS MODEL LR-3 ALTERNATOR CONTROLLER
CASE GND STUD
TO ALTERNATOR 1 (+) LOADMETER (–)
MIDI FUSE 80A
MIDI FUSE 60A
50MV/100A
STARTER CONTACTOR
FWL
MAIN ALT 60A
STARTER
2TL1-5K
LEFT MAG OFF/ON/(START)
2TL1-50M
RIGHT IGN OFF/ON/--
IMPULSE MAGNETO
20AWG SHIELDED
NOTE: INSTALL FUSE AND WIRE FOR FUTURE UPGRADE TO P-MAG.
TO ALTERNATOR 2 (+) LOADMETER (–)
AUX ALT 20-40A
FLD
OV SENSE
BUS
LAMP
GND
1TL1-3
AUX ALTN OFF/ON
SDBY ALTN FIELD 5A
R=470 Ohm 1/2 Watt
GARMIN GAD27 DISCRET INPUT "AUX ALT ON"
E-BUS Diode 15 Watt Heatsink
E-BUS
GSU 25 2A
GMU 11 2A
GEA 24 2A
G5 5A
GDU 460 PFD 5A
GDU 470 MFD 5A
GTR 205x 10A
GAD 27 2A
PITCH Trim Power IN 5A
PITCH TRIM BSTR 15A
GTX 33es 5A
AUTOPILOT 5A
GMC 307 2A
ROLL Trim Power IN 5A
GNC 355A GPS 5A
GNC 355A COM 10A
GAD 29 2A
GEA 24 – VOLT MONITOR 1A
SPARE XA