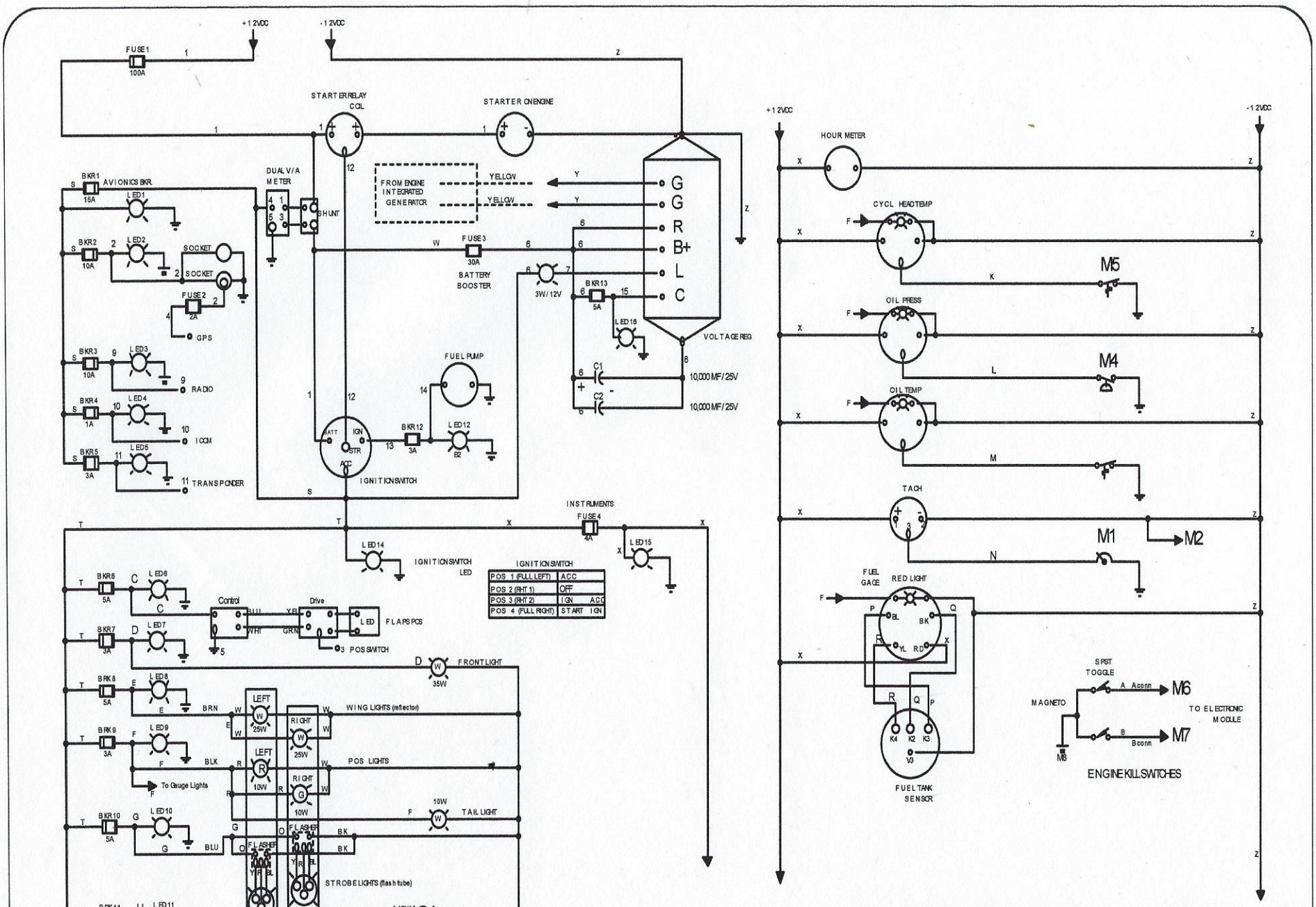

Last update: 03/19/2007

ELECTRICAL SCHEMATIC DIAGRAM

N661WW
ALLEGRO 2000
LSA AIRPLANE
S/N 04-713