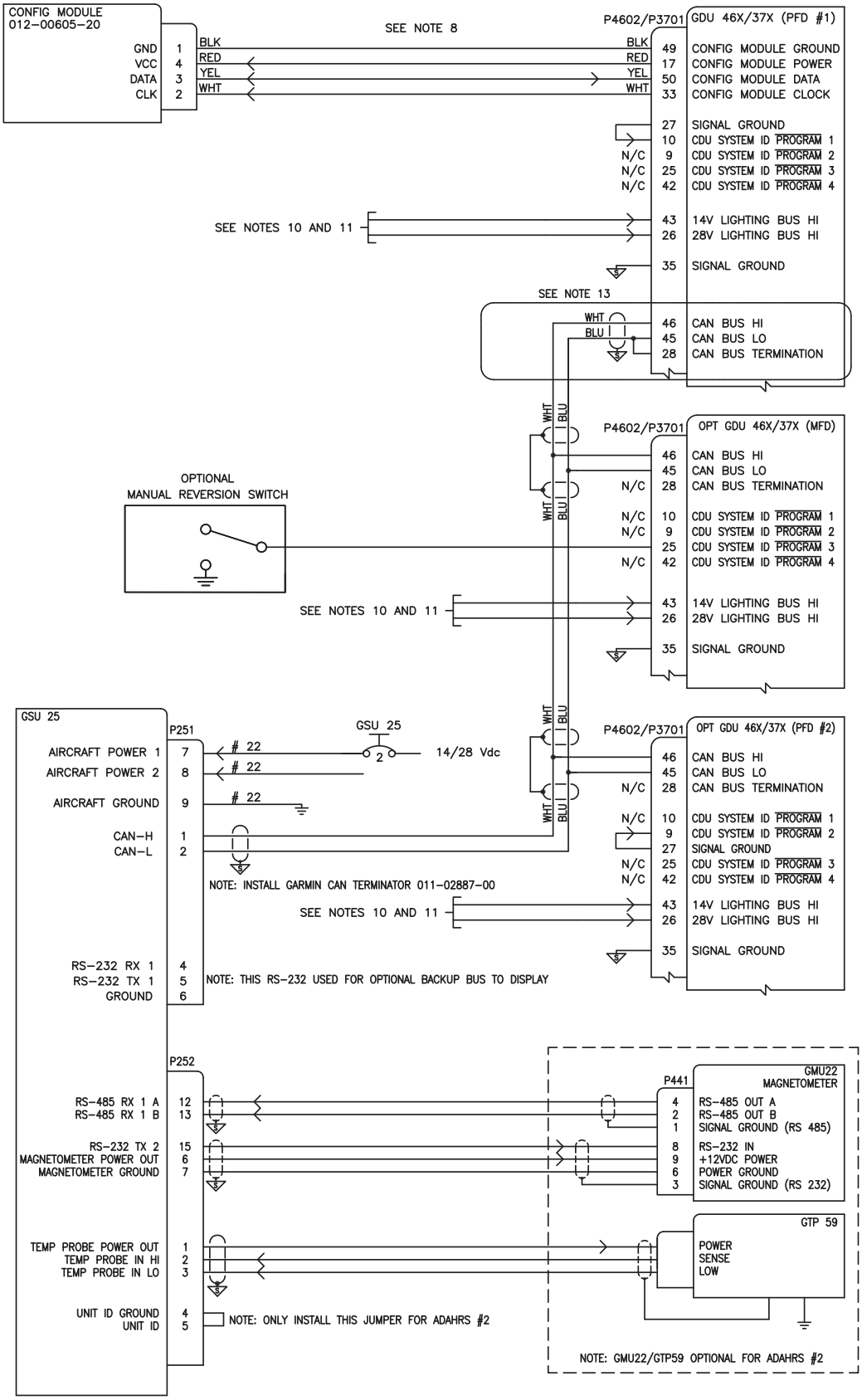

Figure 24-1.2 GDU/GMU 22/GSU 25 Interconnect Drawing