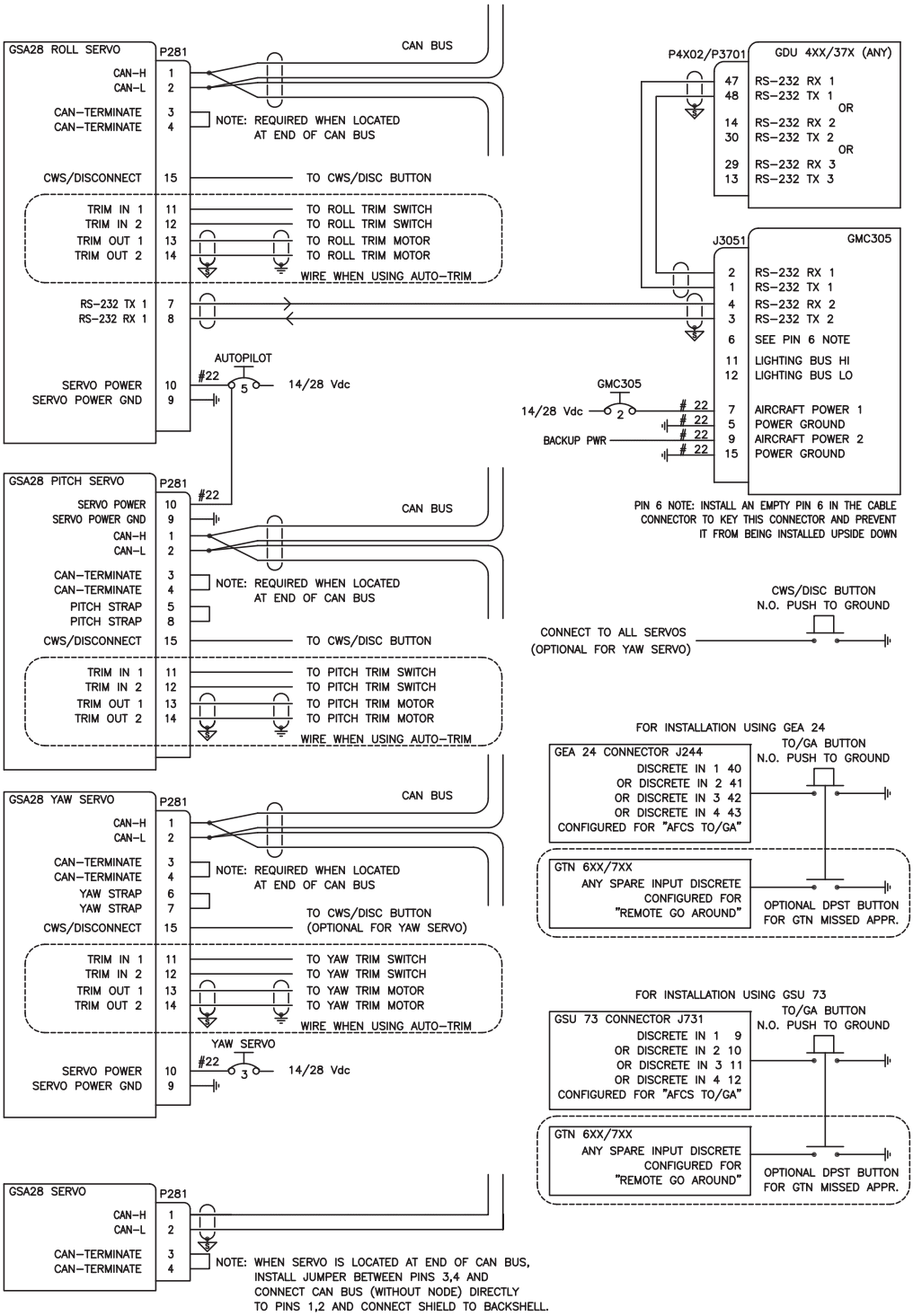

CONFIGURATION GUIDANCE

1. G3X

A. ON THE GDU 4XX/37X CONFIG MODE RS-232 PORT CONFIGURATION PAGE
- SET RS-232 PORT CONNECTED TO GMC 305 TO "GARMIN INSTRUMENT DATA"

B. ON THE GDU 4XX/37X CONFIG MODE LRU EQUIPMENT CONFIGURATION PAGE
- SET AUTOPILOT SERVOS TO ONE OF FOLLOWING:
  "ROLL ONLY", "PITCH + ROLL", OR "PITCH + ROLL + YAW"

Figure 24-1.6 GMC 30X/GSA 28 Interconnect Drawing