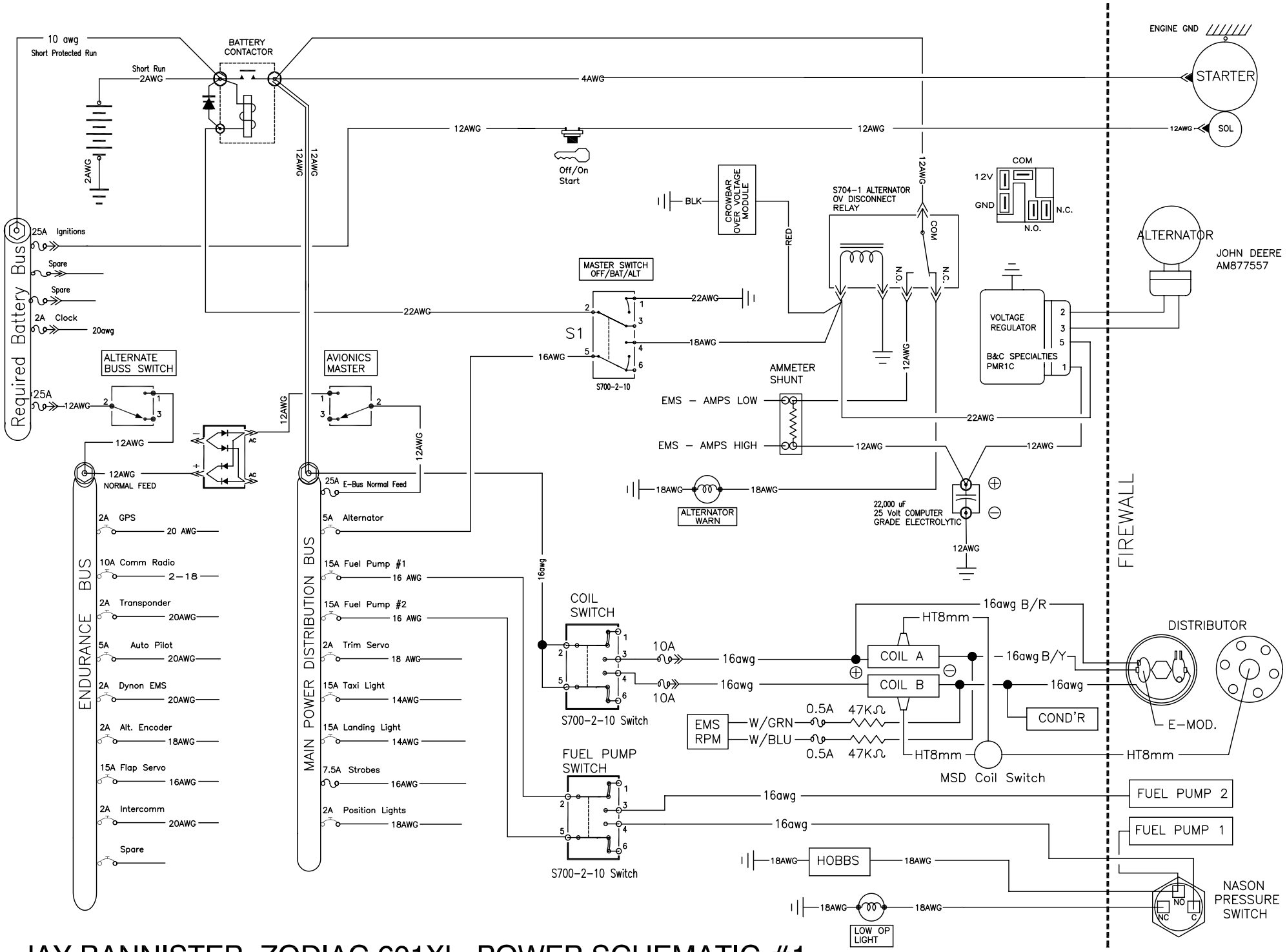

JAY BANNISTER ZODIAC 601XL POWER SCHEMATIC #1