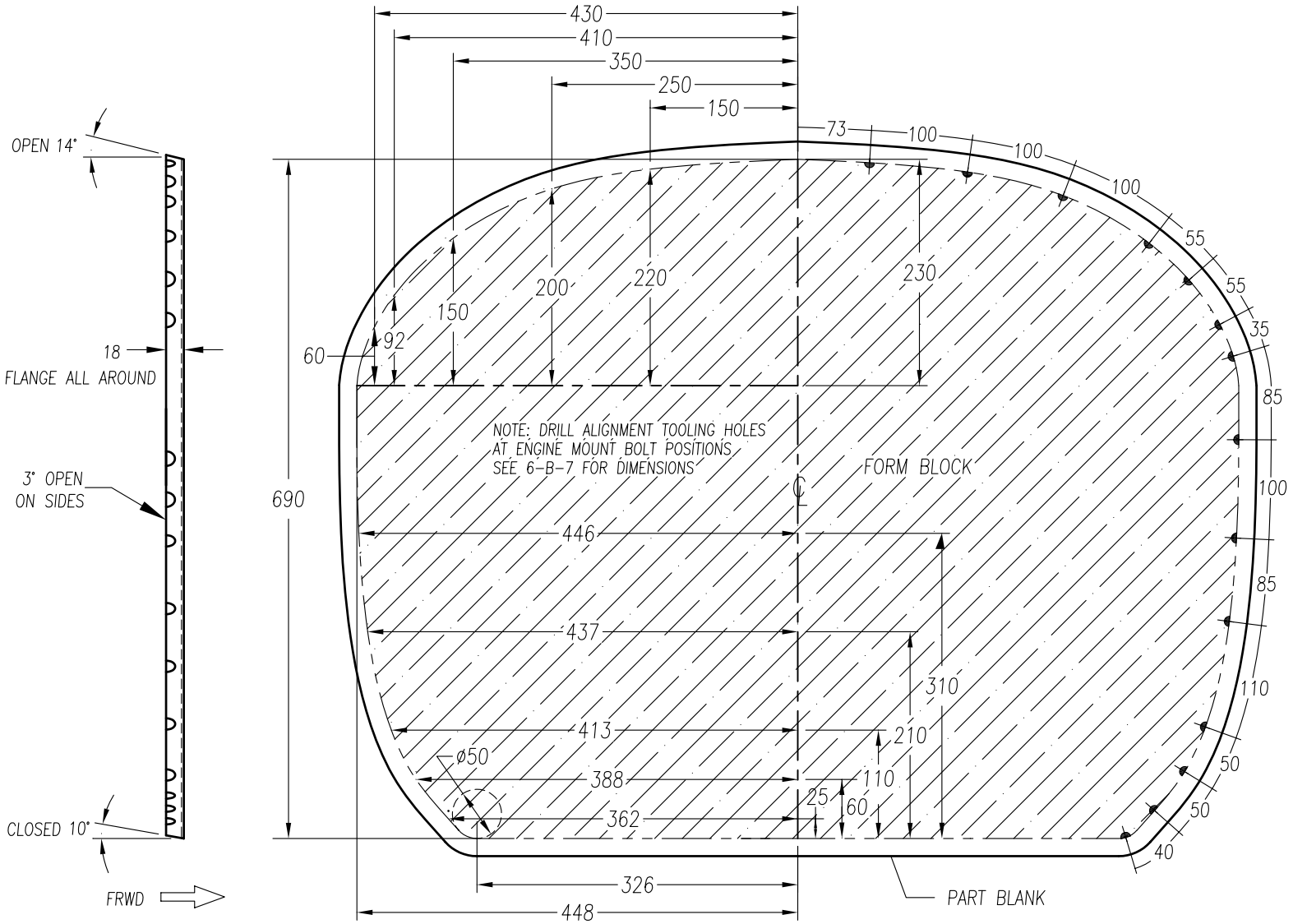

2 1 FIREWALL – GALVANIZED STEEL
t=.018" 26 guage GALVANIZED STEEL (1 REQ'D)

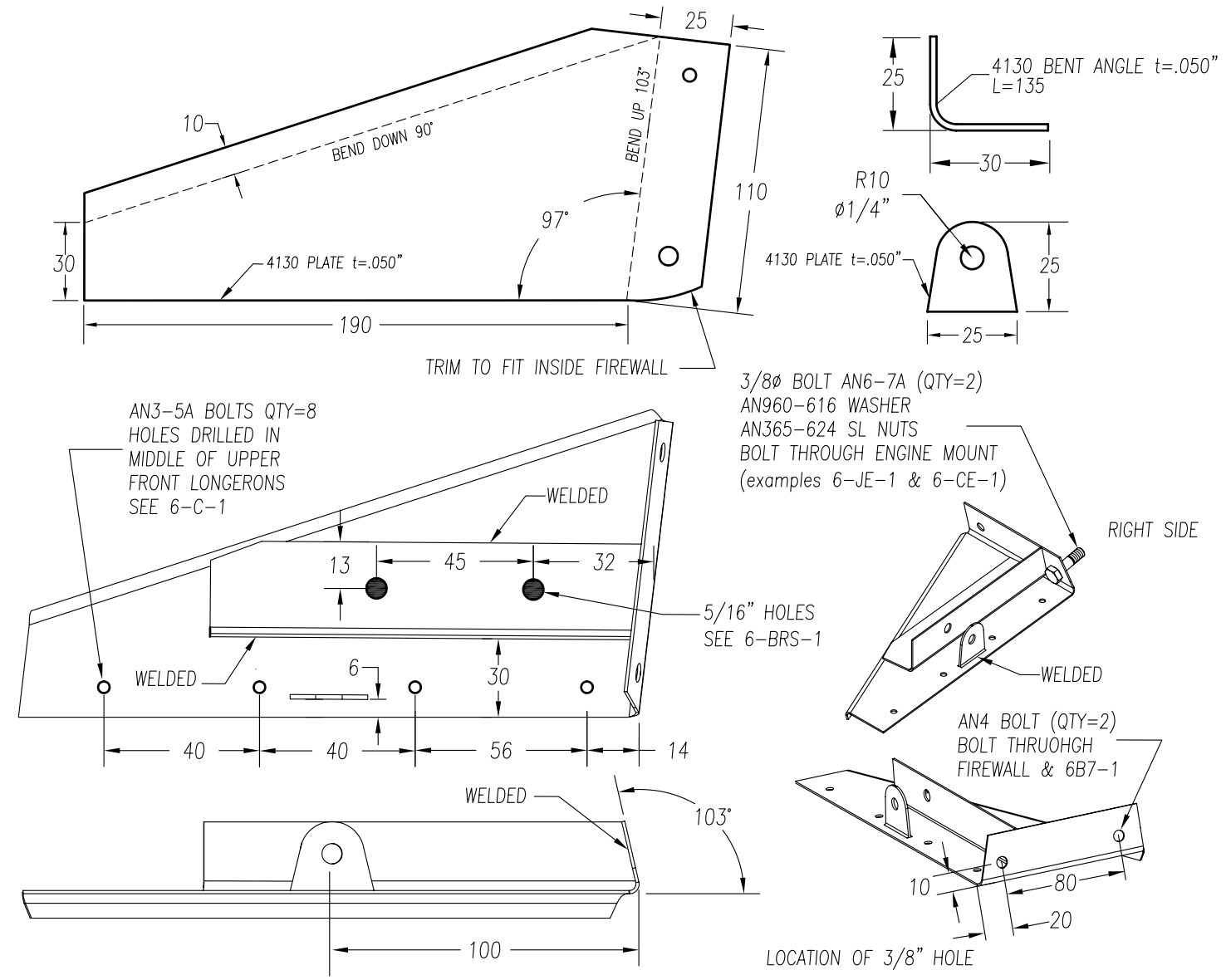

4 4 UPPER ENGINE MOUNT FITTING & CANOPY HINGE & BRS ATTACHMENT
WELDED ASSEMBLY (1L + 1R REQ'D)
4130 PLATE t=.050"

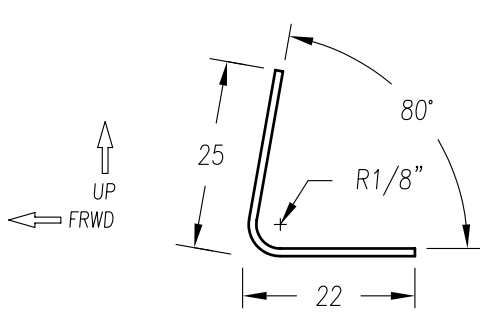

L=650
dl=45

1 0 FIREWALL BOTTOM STIFFENER
t=.040" 6061-T6 (1 REQ'D)

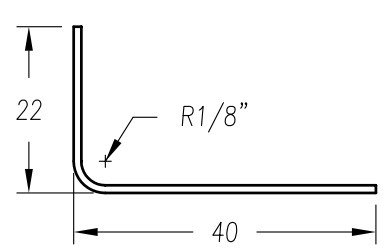

L=530
dl=60

3 0 FIREWALL SIDE STIFFENER
t=.040" 6061-T6 (2 REQ'D)

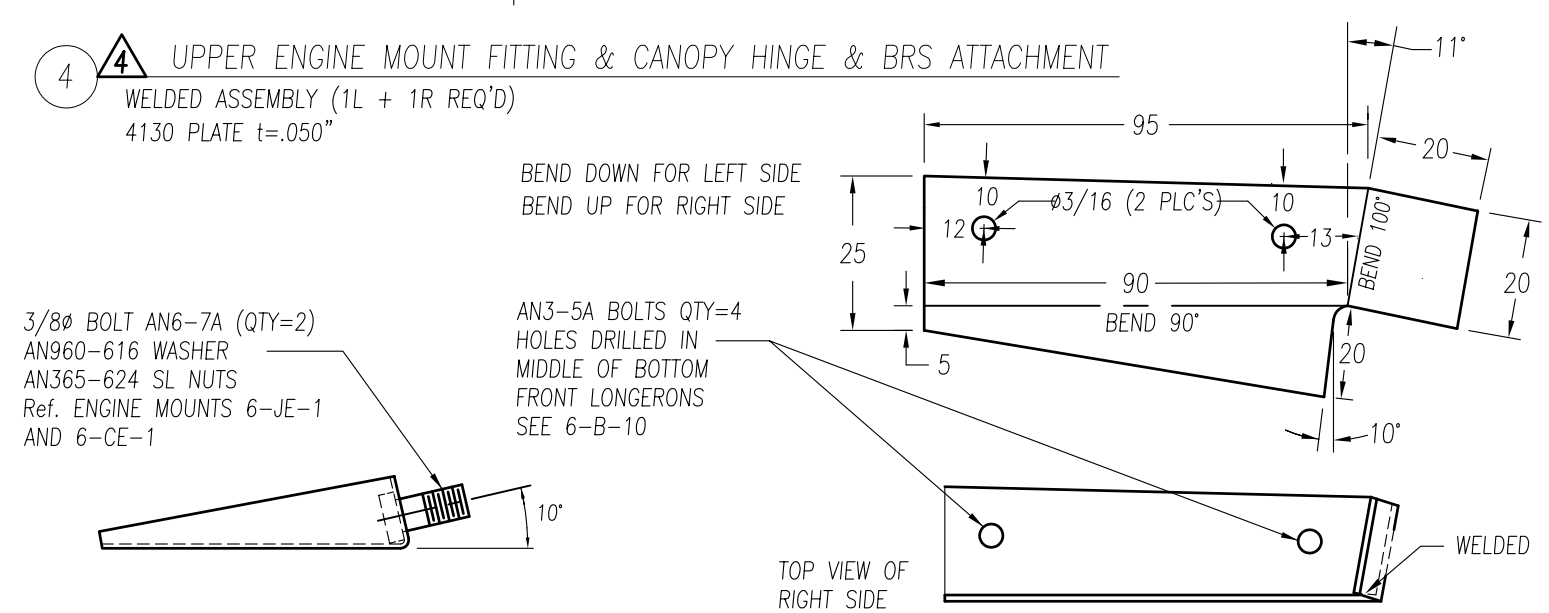

5 2 LOWER ENGINE MOUNT FITTING
WELDED ASSEMBLY (1L + 1R REQ'D)
4130 PLATE t=.050"

ZODIAC CH 601 XL	FIREWALL & STIFFENER ENGINE MOUNT FITTINGS	6-B-6
	copyright© 2002 CHRIS HEINTZ zenithair.com	DATE: 08/07